DI9O3–01

DTC	19 (1)	Accelerator Pedal Position Sensor circuit Malfunction (Open /Short)

CIRCUIT DESCRIPTION

The accelerator pedal position sensor is mounted on the accelerator pedal and detects the accelerator pedal opening angle. When the accelerator pedal is fully closed, a voltage of approximately 1.0 V is applied to terminals VA and VAS of the engine ECU. The voltage applied to the terminals VA and VAS of the engine ECU increases in proportion to the opening angle of the accelerator pedal and becomes approximately 3.8 V when the accelerator pedal is fully opened. The engine ECU judges the vehicle driving conditions from these signals input from terminals VA and VAS, and uses them as one of the conditions to control the injection volume and the diesel throttle valve position. The idle switch is mounted in the accelerator pedal position sensor and sends a IDL signal to the engine ECU when the accelerator pedal is fully closed.
This system has accelerator pedal position sensor and accelerator pedal closed position switch for fail safe.

DTC No.	DTC Detecting Condition	Trouble Area
19 (1)	Open or short in accelerator pedal position sensor circuit for 0.05 sec. or more	• Open or short in accelerator pedal position sensor circuit • Accelerator pedal position sensor • Engine ECU

HINT:
After confirming DTC 19 (1), use the hand–held tester to confirm the accelerator pedal opening percentage and accelerator pedal close position switch condition.

Accelerator pedal opening position expressed as percentage		Trouble area
Accelerator pedal fully closed	Accelerator pedal fully open	
0 %	0 %	VCC line open VA, VAS line open or short
Approx. 100 %	Approx. 100 %	E2C line open

WIRING DIAGRAM

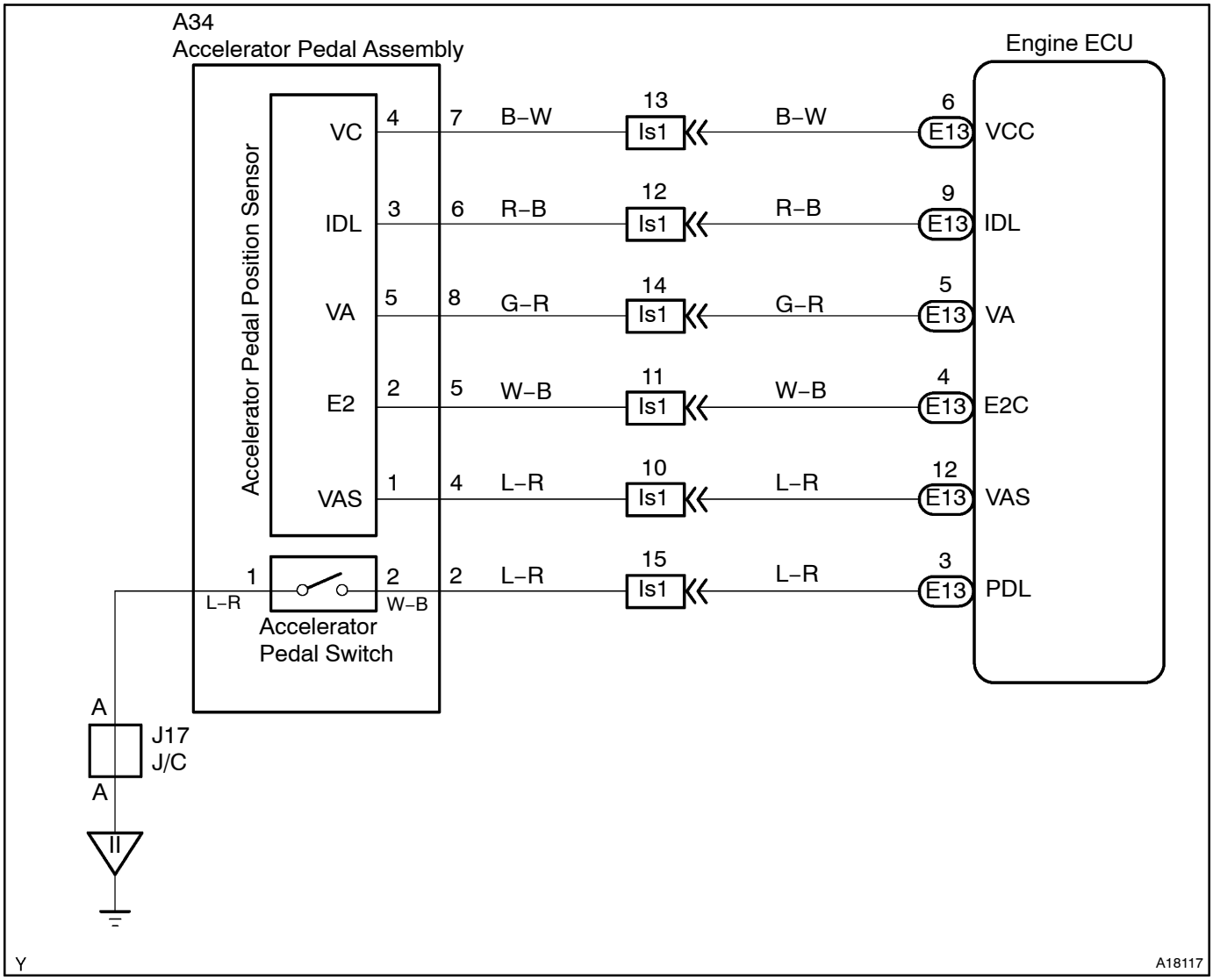

INSPECTION PROCEDURE

When using hand-held tester

1	Read accelerator pedal opening percentage on hand-held tester.

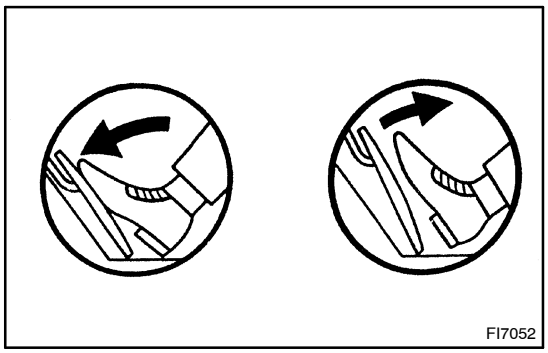

OK:

Accelerator pedal	Accelerator pedal opening position expressed as percentage
Fully open	Approx. 65 %
Fully closed	Approx. 18 %

OK → **Check for intermittent problems (See page DI–4).**

NG

2	Check power source of accererator pedal position sensor.

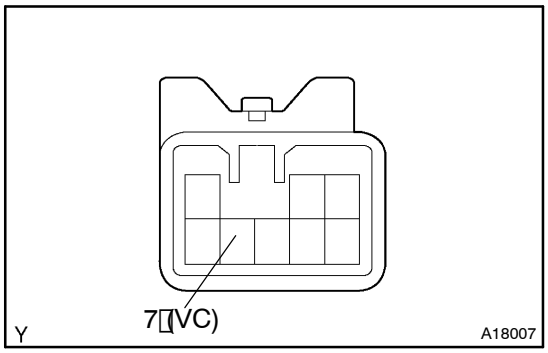

PREPARATION:

(a) Disconnect the accelerator pedal position sensor connector.

(b) Turn the ignition switch ON.

CHECK:

Measure the voltage between terminal 7 of the wire harness side connector and the body ground.

OK:

Voltage: 4.5 – 5.5 V

NG → **Go to step 5.**

OK

3	Check voltage between terminals VA, VAS and E2C of engine ECU.

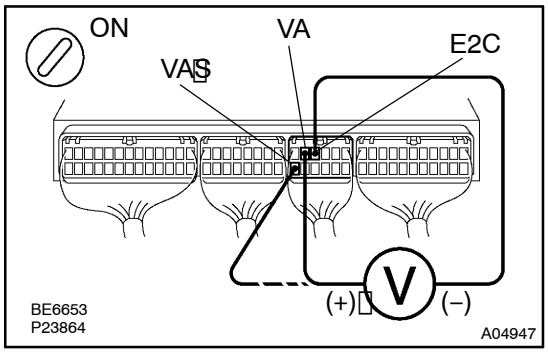

PREPARATION:

(a) Remove the glove compartment door.

(b) Turn the ignition switch ON.

CHECK:

Measure the voltage between terminals VA or VAS and E2C of the engine ECU.

OK:

Accelerator pedal	Voltage
Fully closed	0.7 – 1.1 V
Fully open	2.9 – 4.9 V

OK → **Check and replace engine ECU (See page IN–19).**

NG

4	Check for open and short in harness and connector between engine ECU and accelerator pedal position sensor (VA, VAS line) (See page IN–19).

NG → **Repair harness or connector.**

OK

Replace accelerator pedal position sensor.

5	**Check voltage between terminals VCC and E2C of engine ECU.**

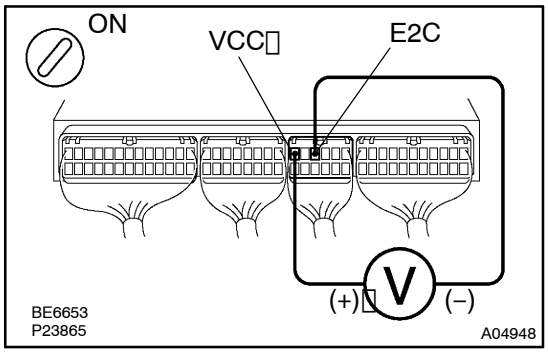

PREPARATION:

(a) Remove the glove compartment door.

(b) Turn the ignition switch ON.

CHECK:

Measure the voltage between terminals VCC and E2C of the engine ECU connector.

OK:

Voltage: 4.5 – 5.5 V

NG	**Check and replace engine ECU (See page IN–19).**

OK

Check for open in harness and connector between engine ECU and accelerator pedal position sensor (VCC line) (See page IN–19).

When not using hand–held tester

1	**Check power source of accelerator pedal position sensor (See step 2 when using hand–held tester).**

NG	**Go to step 4.**

OK

2	**Check voltage between terminals VA, VAS and E2C of engine ECU (See step 3 when using hand–held tester).**

OK	**Check and replace engine ECU (See page IN–19).**

NG

3	Check for open and short in harness and connector between engine ECU and accelerator pedal position sensor (VA, VAS line) (See page IN–19).

NG → Repair harness or connector.

OK

Replace accelerator pedal position sensor.

4	Check voltage between terminals VCC and E2C of engine ECU (See step 5 when using hand–held tester).

NG → Check and replace engine ECU (See page IN–19).

OK

Check for open in harness and connector between engine ECU and accelerator pedal position sensor (VCC line) (See page IN–19).